GPS Overview

Christopher R. Carlson
Dynamic Design Lab
Stanford University
03.01.02

Some Credit

- Most of this information is covered in AA272C with Professor Per Enge
  - A fun and not too difficult class for controls persons
- Many of these figures were borrowed from:
  - The Internet
  - Dr. Akos of the WAAS lab.

Outline

- Motivation
- Big picture
- RF signals
- Signal tracking
- GPS error sources
- Differential GPS
- Novatel Datasheet

Carlson’s Motivation

- GPS provides accurate (inertial) position and velocity information
- Some assumptions from classical estimation theory hold (it is a cool system)

Applications

- Vehicle state/parameter estimation
  - Velocity, attitude, etc
- (Precision) Navigation
  - Socially positive and negative
- Surveying unknown areas
  - Studying plate tectonics
- Studying the atmosphere
- Global time reference

GPS Satellite Constellation

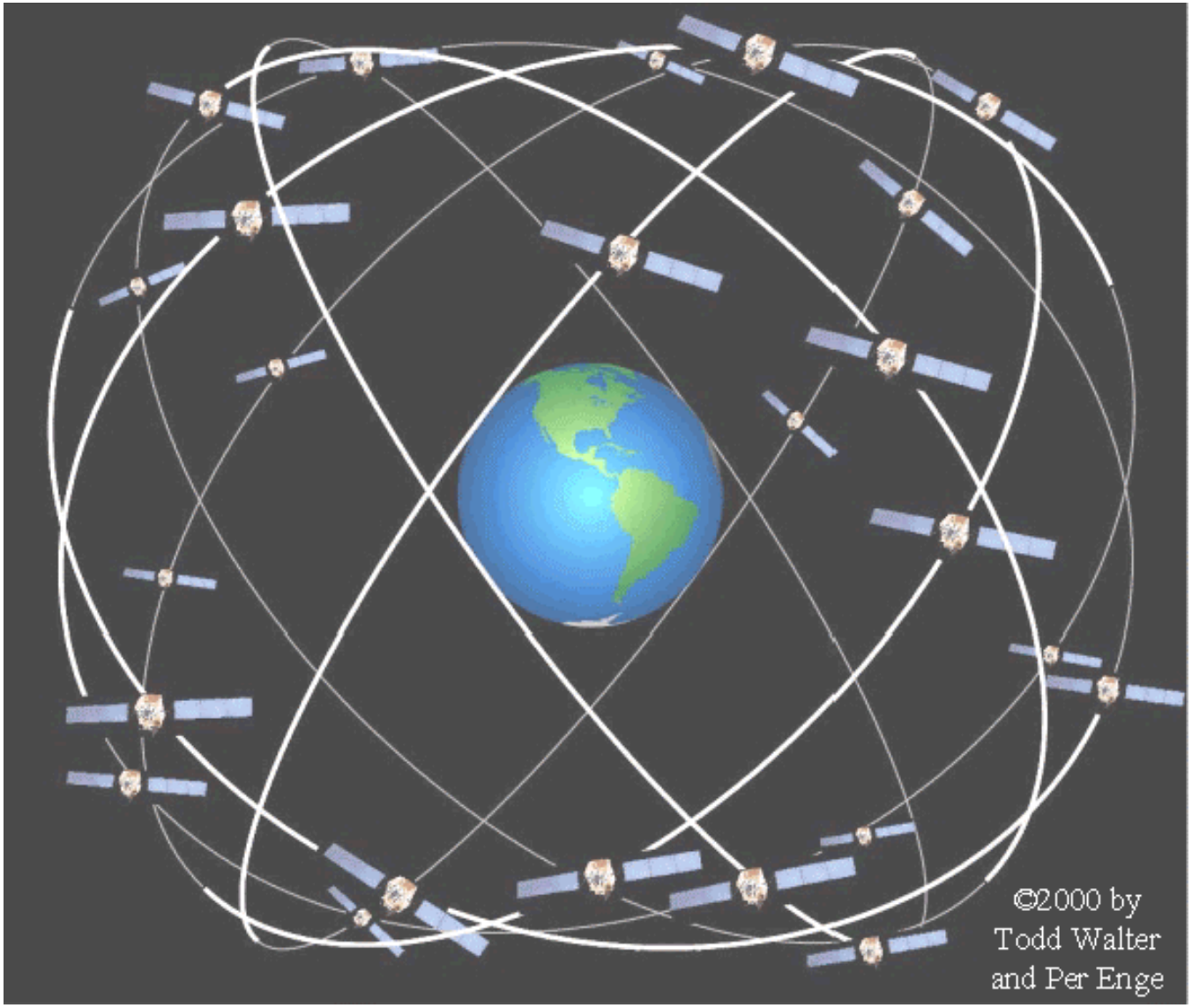

Control Segment

Global Positioning System (GPS) Master Control and Monitor Station Network

GPS Position Solution

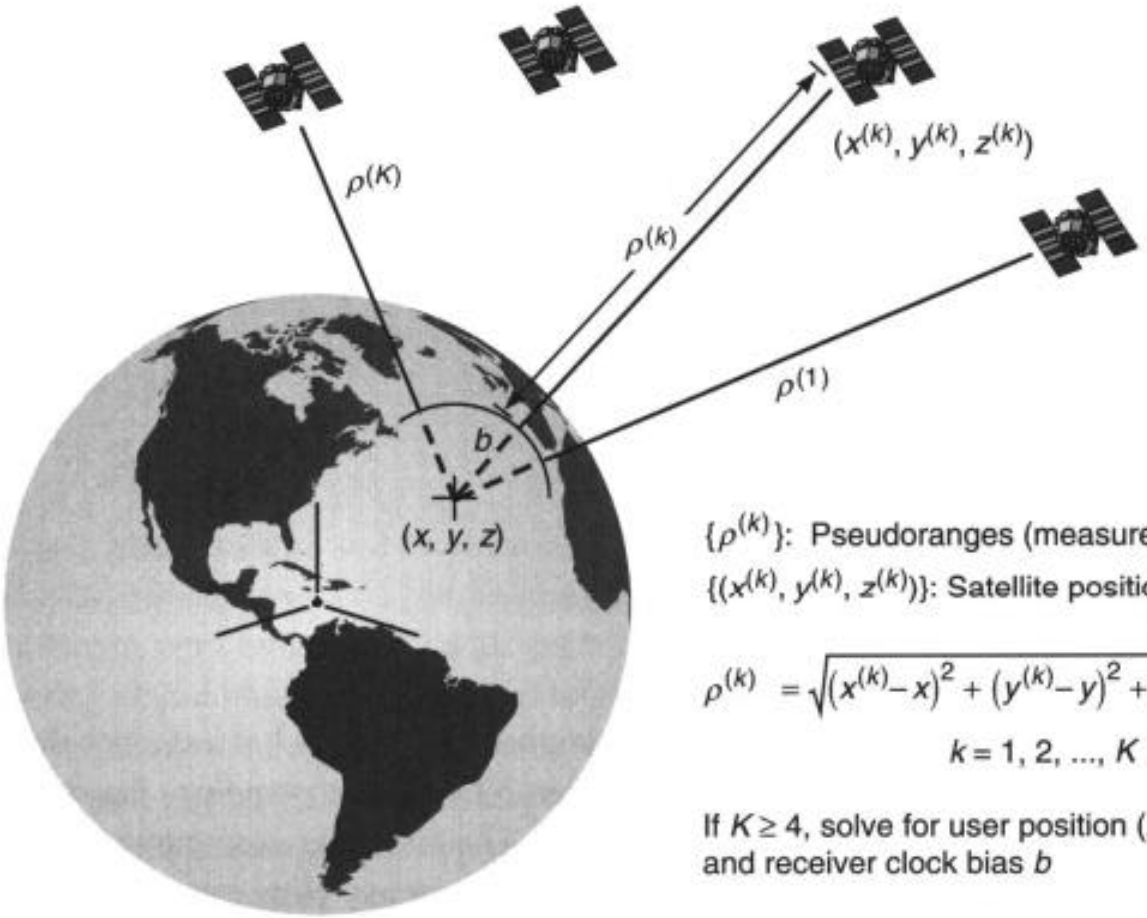

$\{\rho^{(k)}\}$: Pseudoranges (measurements)

$\{(x^{(k)}, y^{(k)}, z^{(k)})\}$: Satellite positions (known)

$$\rho^{(k)} = \sqrt{\left(x^{(k)} - x\right)^2 + \left(y^{(k)} - y\right)^2 + \left(z^{(k)} - z\right)^2} - b$$

$$k = 1, 2, \ldots, K$$

If $K \geq 4$, solve for user position (x, y, z), and receiver clock bias b

Traveling at Light Speed

- GPS range measurements are the time of flight multiplied by the speed of light
- $3x10^8$ [m/s] ➔ 1 microsecond is 300[m] of error
- Need a very precise way to measure time

GPS time measurement

- The GPS signal extremely weak
- All signals ride the exact same carrier frequency
- Some clever EE’s applied CDMA techniques to GPS 30 years ago

CDMA uses PRN codes to “spread” a signal about the RF carrier

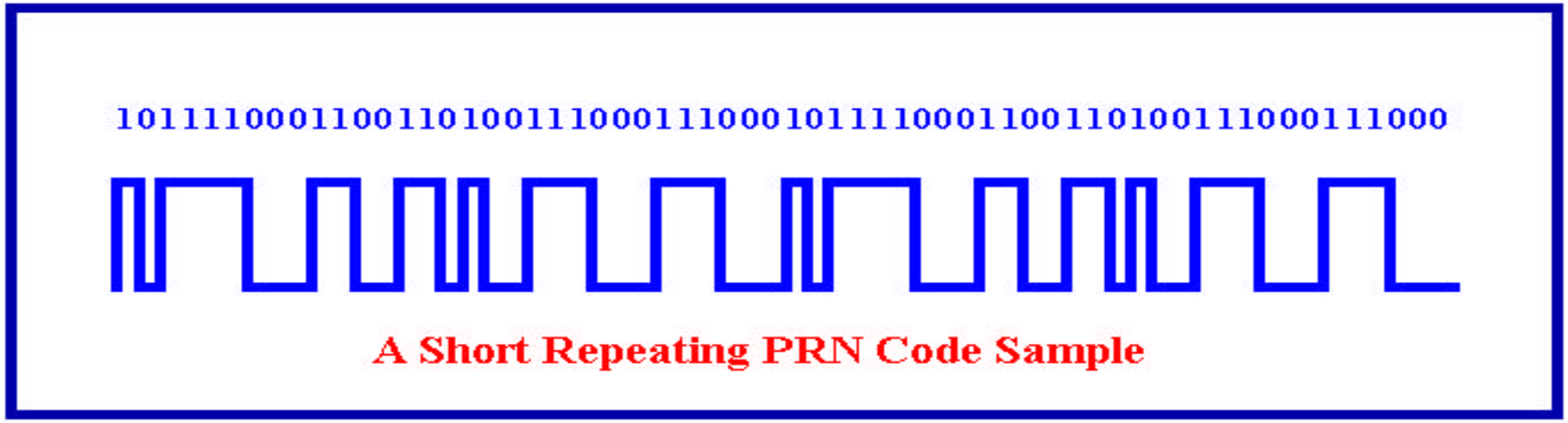

- Each “Chip” is 1 microsecond wide
- Sometimes Called the C/A code

PRN Autocorrelation

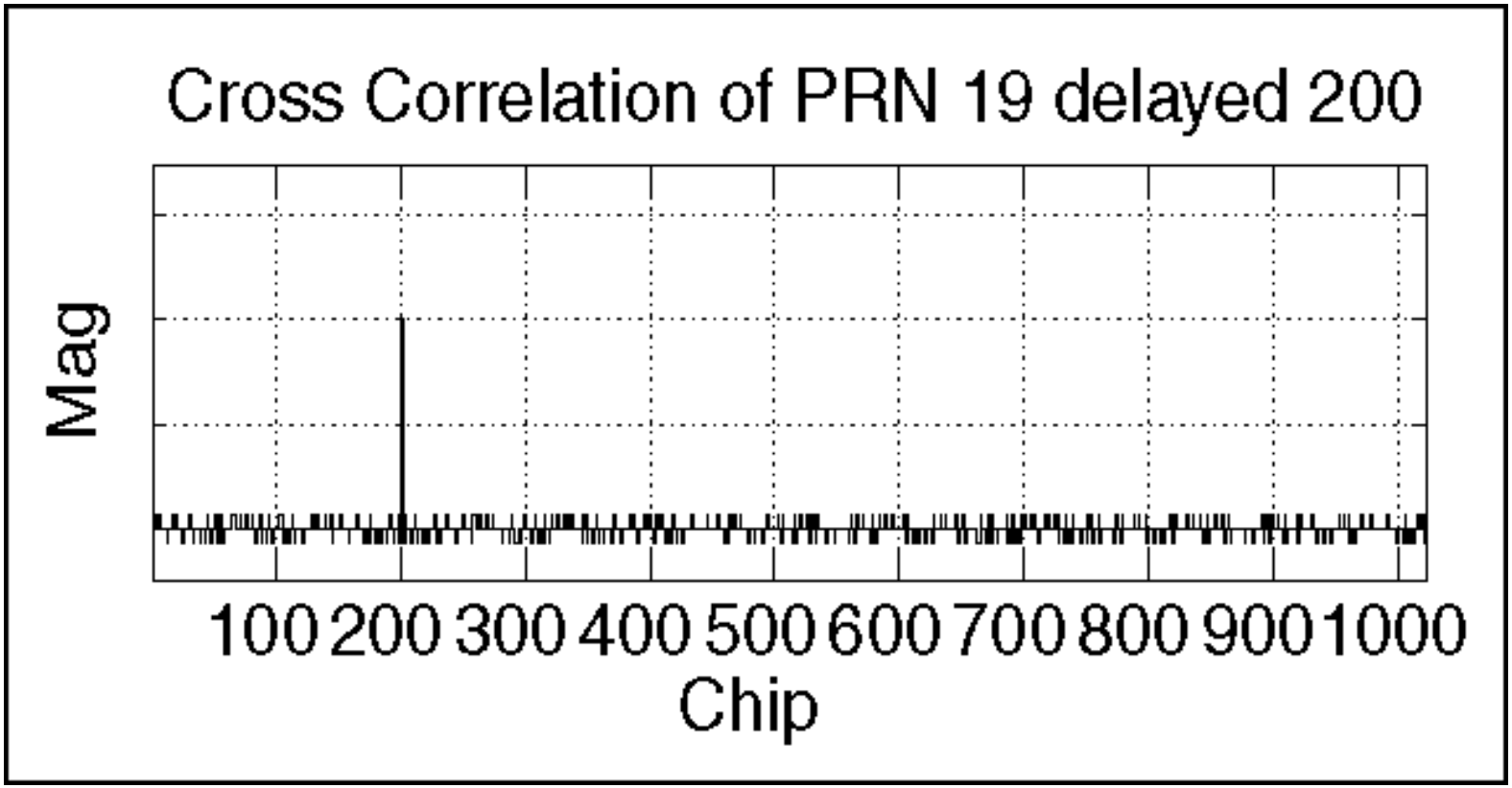

$$\sin(a)*\sin(b) = \sin(a+b) + \sin(a-b)$$

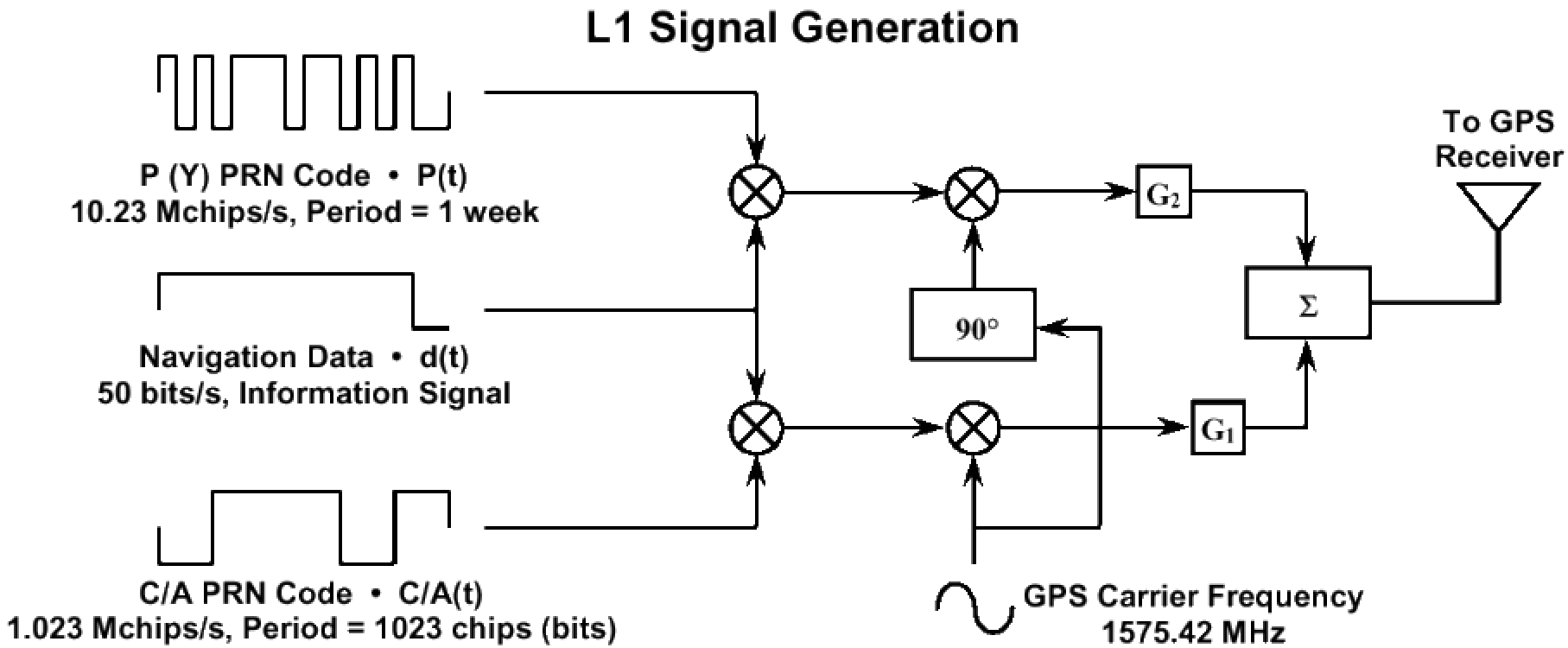

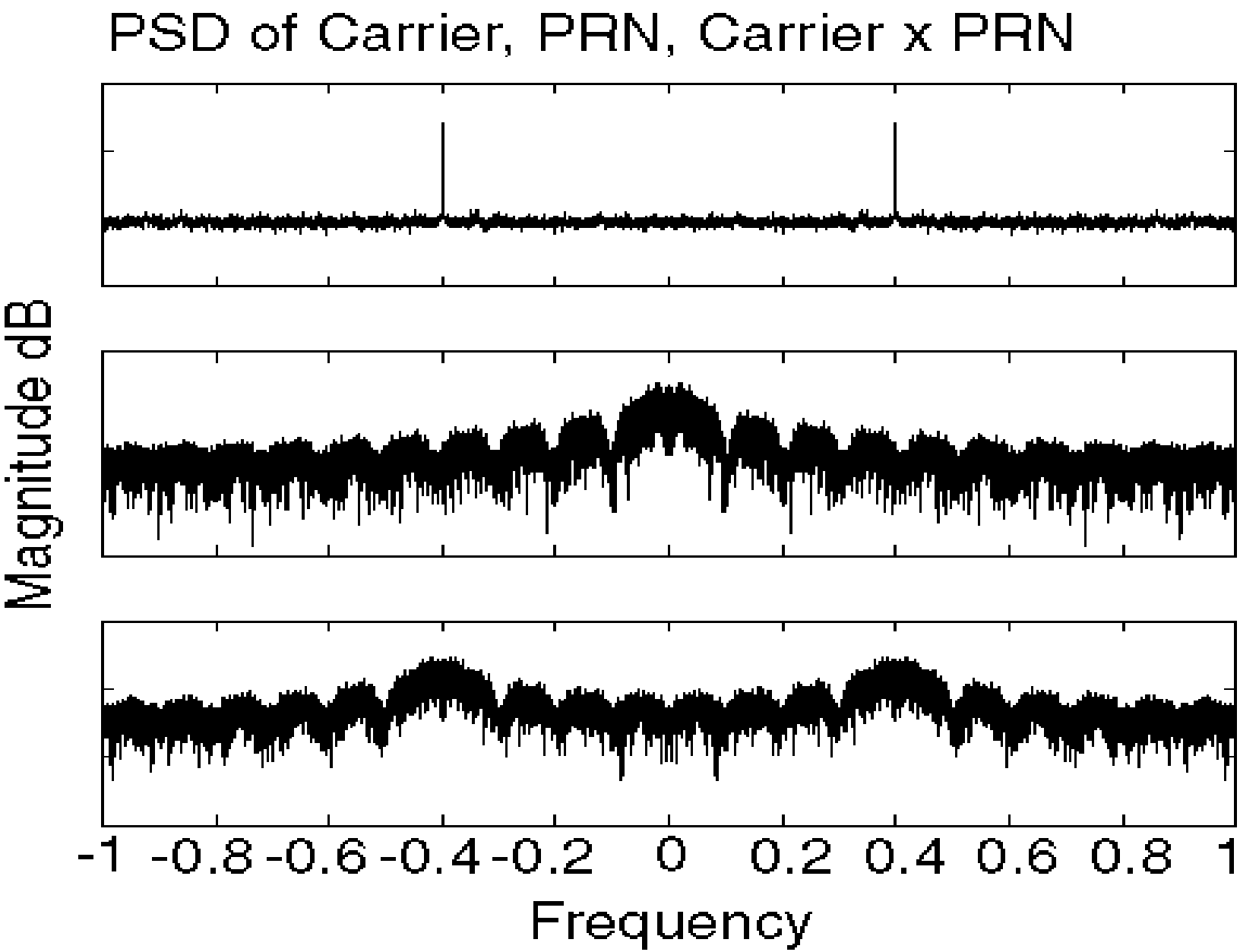
PSD of Carrier, PRN, Carrier x PRN
Magnitude dB
-1
-0.8
-0.6
-0.4
-0.2
0
0.2
0.4
0.6
0.8
1
Frequency

PSD of GPS Data

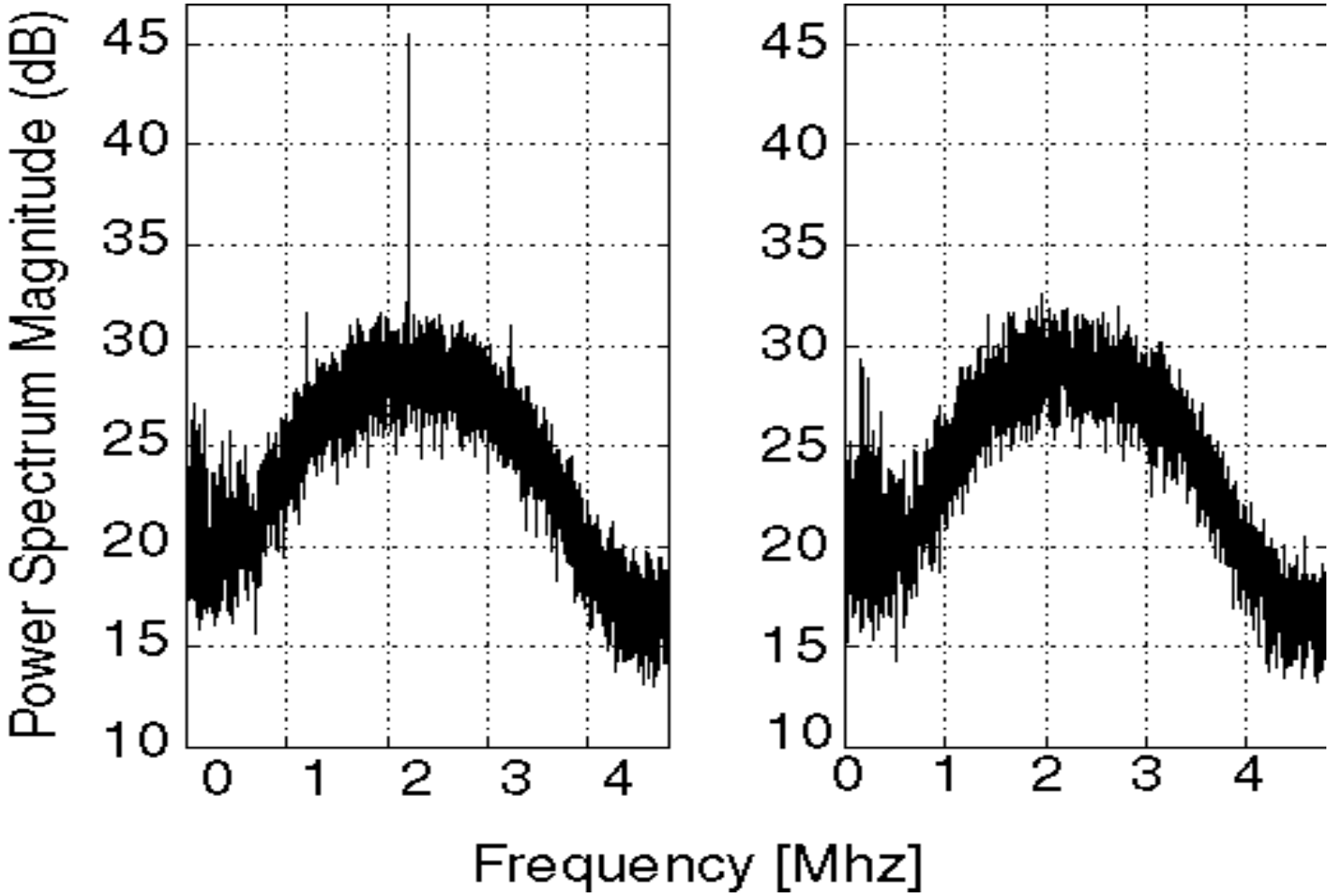

Measuring Time

- The entire GPS system is rising edge triggered with respect to GPS time standard
  - Satellites have very accurate clocks
- Accuracy of GPS time depends on how well receiver can resolve the rising edge of chip
- A rising edge is just a relative reference.

Navigation Message

- The PRNs are further encoded with a navigation message.
- Encodes the exact time of each chip transition
- Also contains satellite ephemeris (orbit) information

It gets a Little Complicated

- Need to remove carrier to resolve PRN
- Problem: Doppler
- Need know PRN to get carrier
- Upon startup, receiver goes through acquisition phase.

Coarse Acquisition (C/A)

- Searches over Frequency and PRN phase until close
- Code tracking loop
  - Local PRN synchronized with incoming PRN
- Carrier tracking loop
  - Reference carrier signal tracks incoming signal

Carrier and C/A search

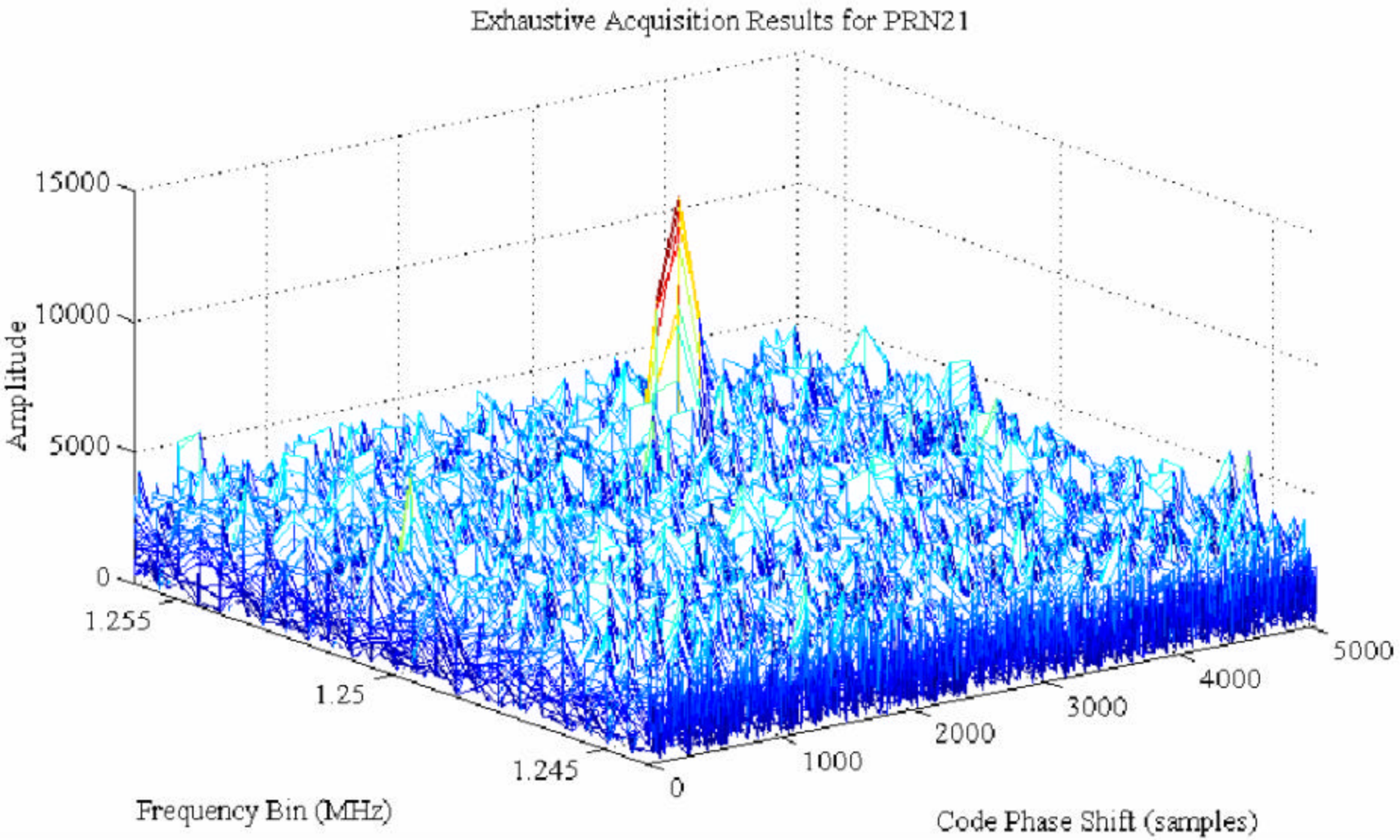

Code Tracking, a DLL for the PRN

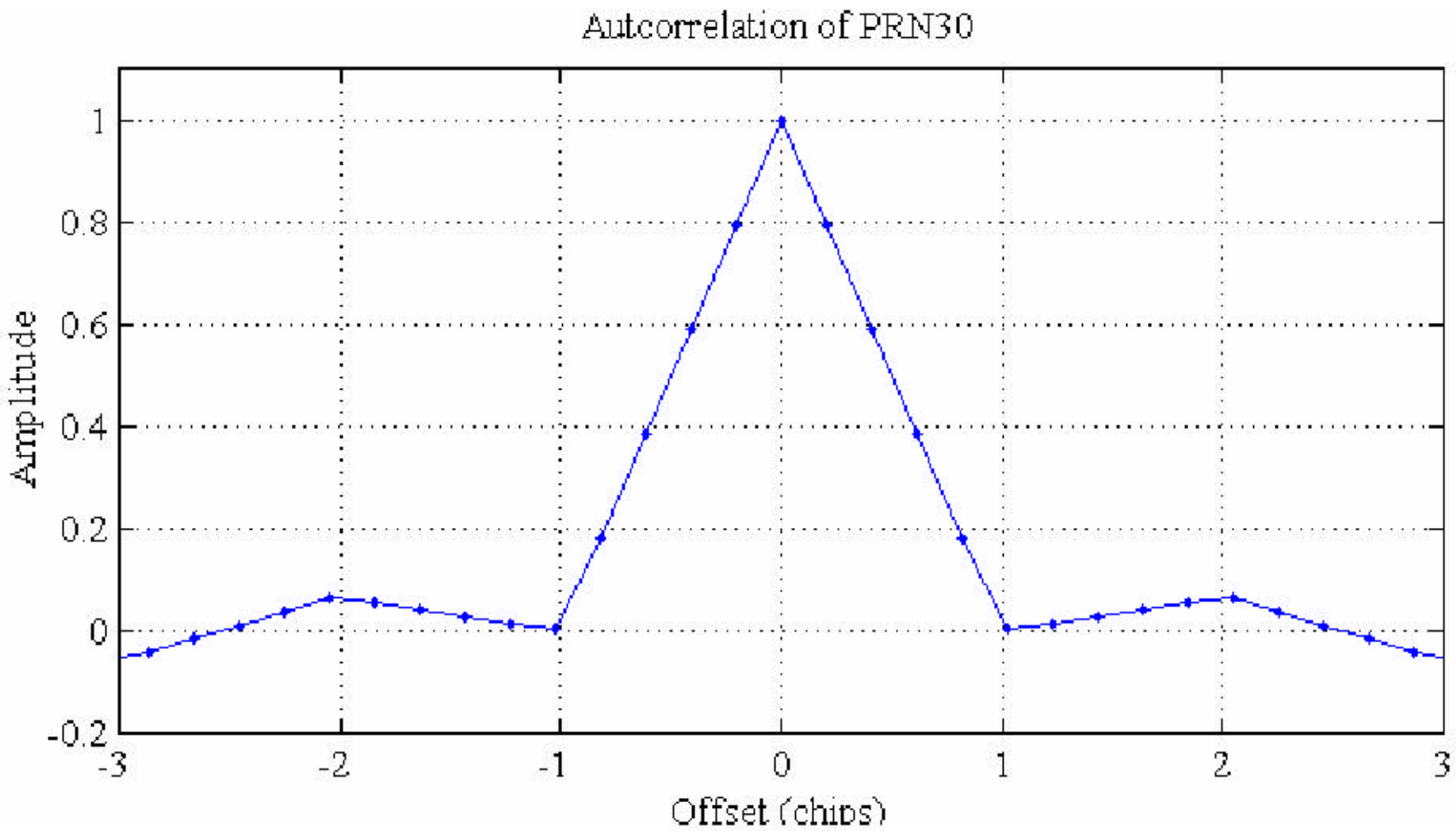

A PLL for Carrier Tracking

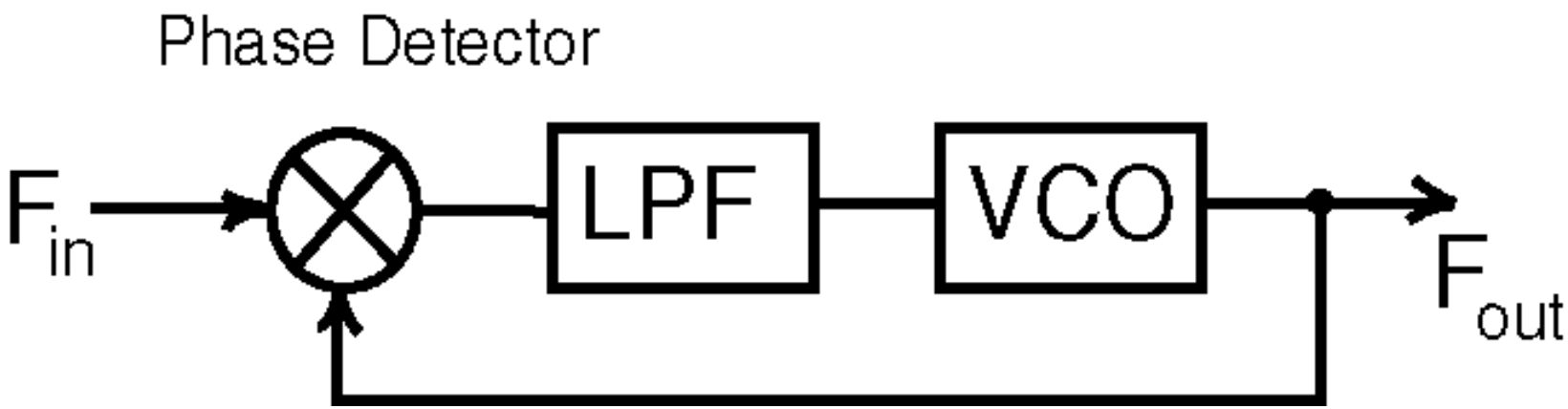

Coupled Tracking Loops

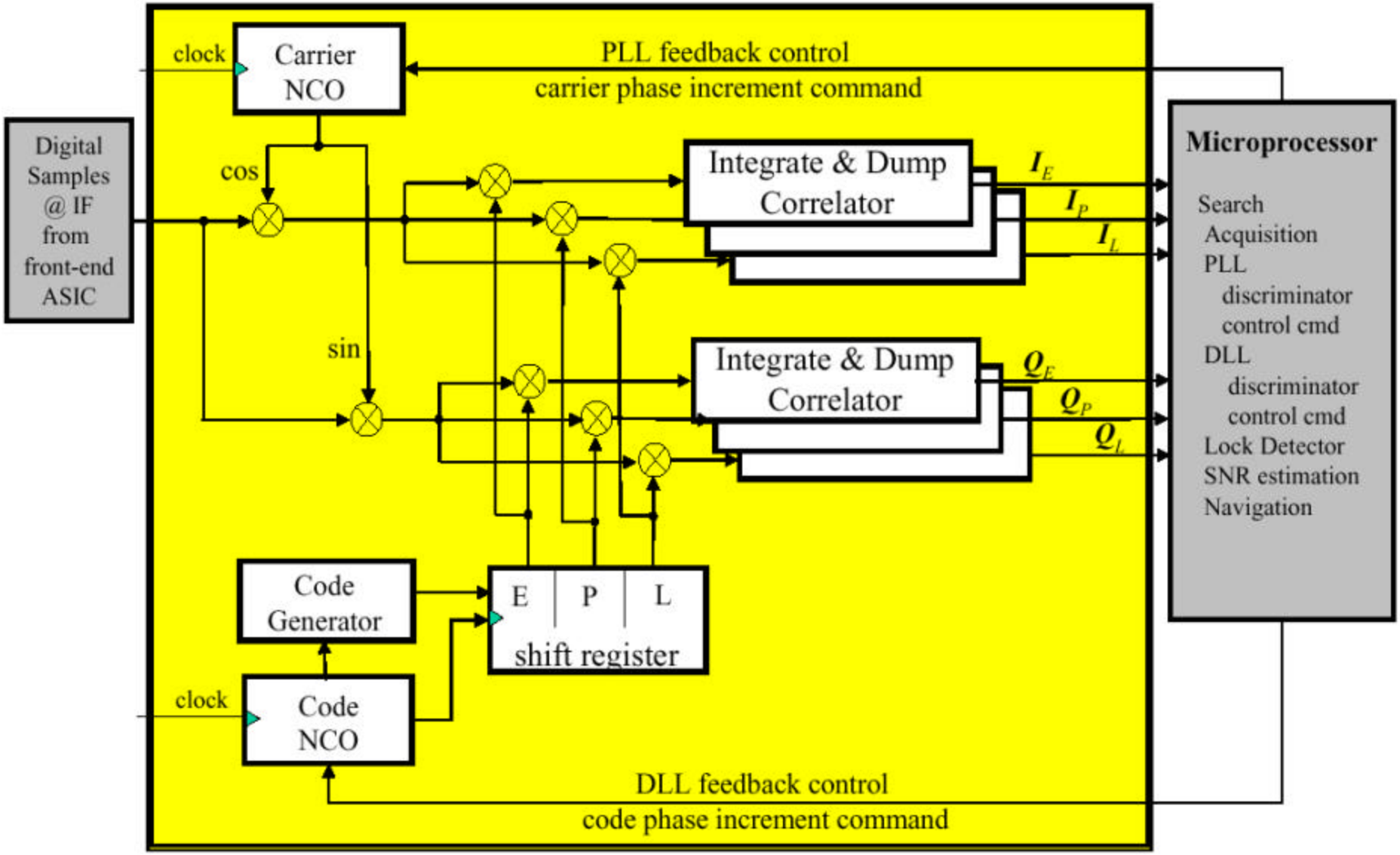

Loop Bandwidths

- Carrier tracking loop usually 10-100hz
  - Trade off tracking with noise rejection
- Novatel claims a BW of 15hz. But gives solutions at 20hz.

- Code tracking loop (DLL) usually 0.1-10hz
  - Code loop aided by carrier PLL

What Was All That?

- Receiver clicks on
- Searches for satellites, locks on
- Decodes navigation message and figures out what time signal was sent
- Zooms in on a chip transition and very precisely time stamps it
- Difference between satellite and receiver times multiplied by “c” gives pseudorange

Dominant Error Sources

- Iono & Tropo Act Like Lenses

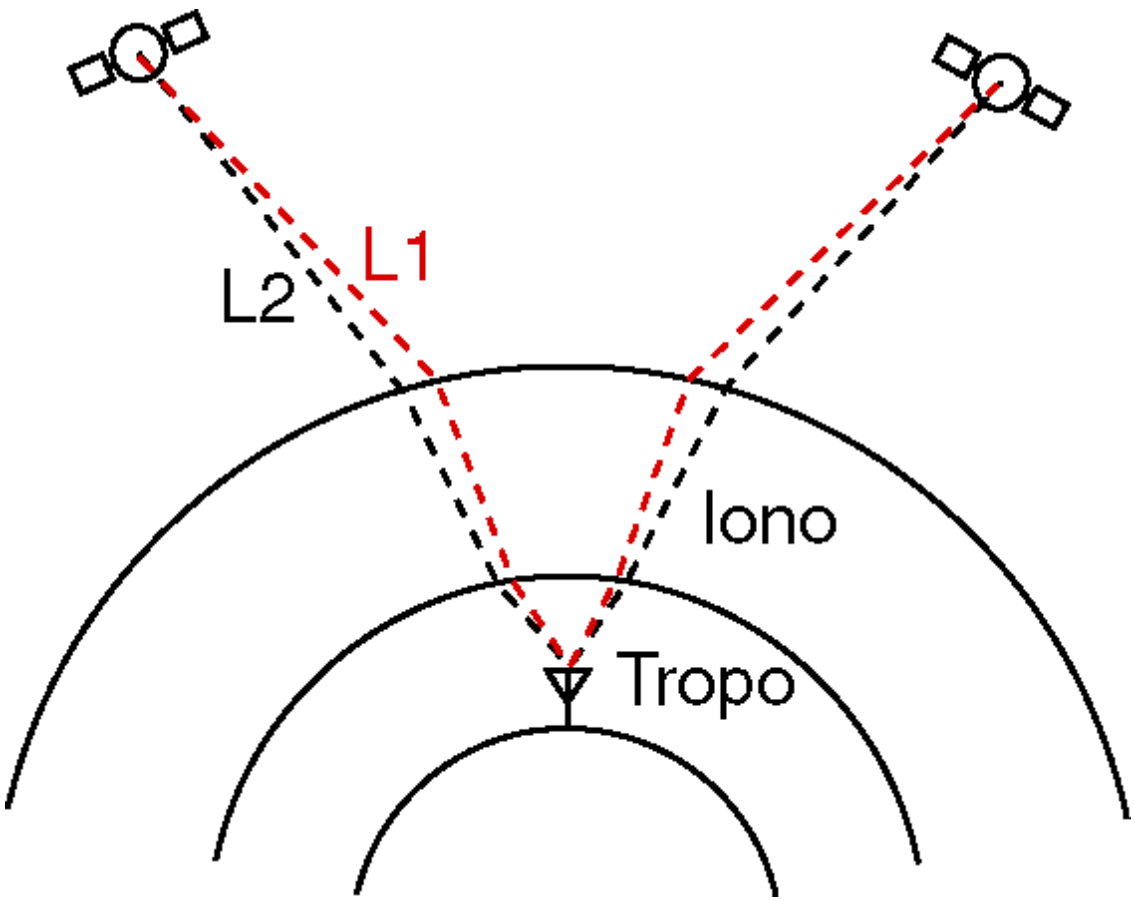

Selective Availability

- DOD deliberately dithered the satellite clocks
- Position Error an order of magnitude higher
- Dither was pretty much white
- Civilian DGPS pretty much kicked it

GPS Error Sources

GPS ERROR SOURCES

ERROR SOURCE	TYPICAL RANGE ERROR	DGPS (CODE) RANGE ERROR <100 KM REF-REMOTE
SV CLOCK	1 M	
SV EPHEMERIS	1 M	
SELECTIVE AVAILABILITY	10 M	
TROPOSPHERE	1 M	
IONOSPHERE	10 M	
PSEUDO-RANGE NOISE	1 M	1 M
RECEIVER NOISE	1 M	1 M
MULTIPATH	0.5 M	0.5 M
RMS ERROR	15 M	1.6 M
ERROR * PDOP=4	60 M	6 M

PDOP=Position Dilution of Precision (3-D) 4.0 is typical

Differential GPS

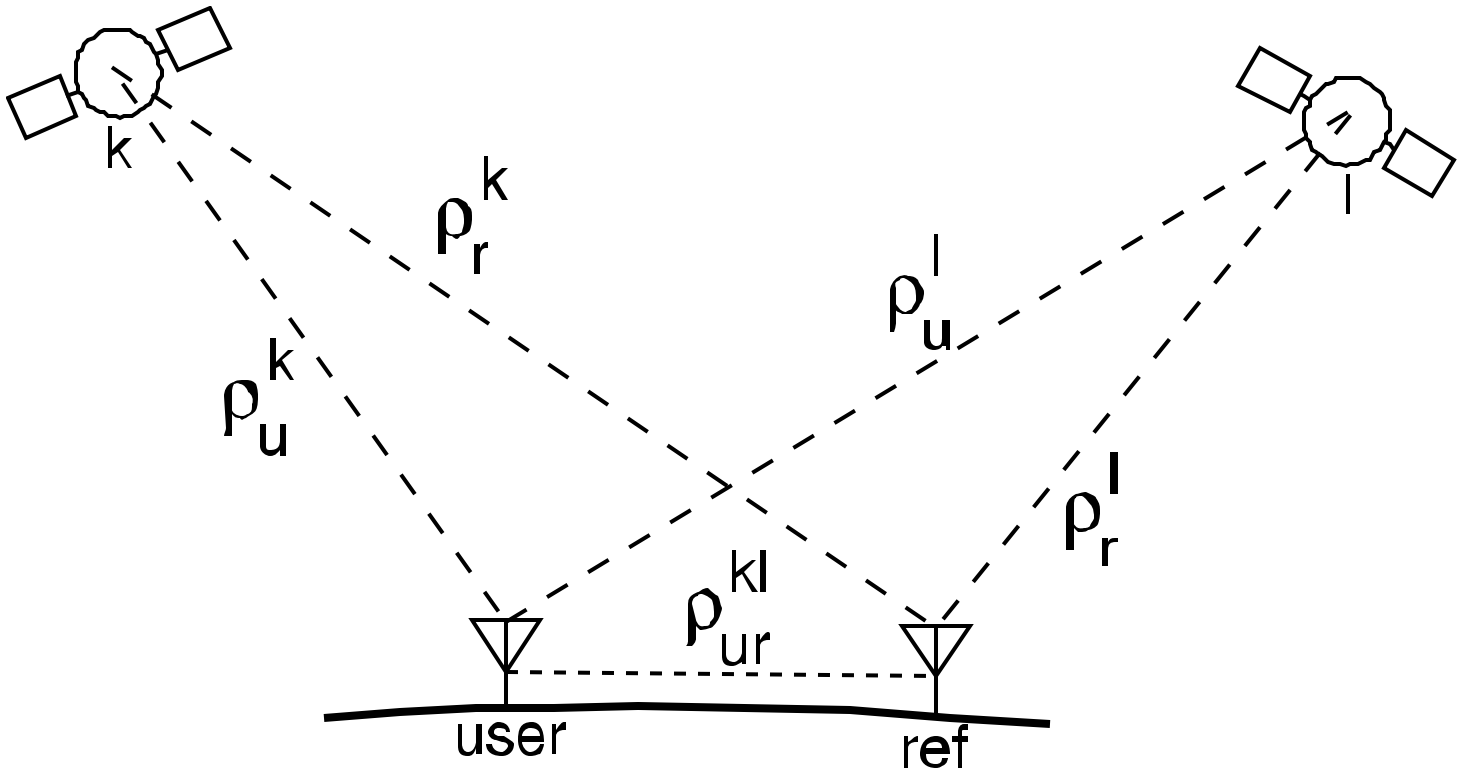

Differential GPS

- Often uses a base station with a surveyed position.
- Allows for common mode errors to be canceled right away
- Requires some sort of information transfer
  - Radio
  - Post processing
  - WAAS

Differential GPS

- Carrier Phase GPS uses the PLL cycle count and the wave length of the carrier to infer distance.
- New problems
  - Integer ambiguity
  - Cycle slips
- Real time centimeter level accuracy

Why is Velocity So Good?

- Velocity uses pseudorange rates
  - Automatically ignores slowly varying errors such as Ionosphere and Troposphere
- Can get rate information from the Doppler in the PLL.
- Each carrier cycle ➔ 19 cm.
- Similar equation form to position solution

OEM4 Specifications

Performance

Position Accuracy[1]	
Single Point L1	1.8 m CEP
Single Point L1L2	1.5 m CEP
WAAS L1	1.2 m CEP
WAAS L1L2	0.8 m CEP
DGPS (L1, C/A)	0.45 m CEP
RT20[2,3]	< 20 cm CEP
RT2[3]	1 cm + 1 ppm
Measurement Precision	
L1 C/A Code	6 cm RMS
L2 P Code	25 cm RMS (AS on)
L1 Carrier Phase	0.75 mm RMS (differential channel)
L2 Carrier Phase	2 mm RMS (differential channel)

Time To First Fix	
Cold Start	50 s (typical)
Signal Reacquisition	
L1	0.5 s (typical)
L2	6 s (typical)
Time Accuracy[1,7]	102 ns RMS
Velocity Accuracy[1]	0.03 m/s RMS
Dynamics	
Acceleration	10 g
Vibration	4 g (sustained tracking)
Velocity[8]	515 m/s max

1. *Typical values. Performance specifications are subject to GPS system characteristics, U.S. DOD operational degradation, ionospheric and tropospheric conditions, satellite geometry, baseline length and multipath effects. Assumes SA Off.*
2. *Expected accuracy after three minute static convergence over short baseline.*
3. *See Typical Performance charts below. Subject to convergance time and baseline length.*